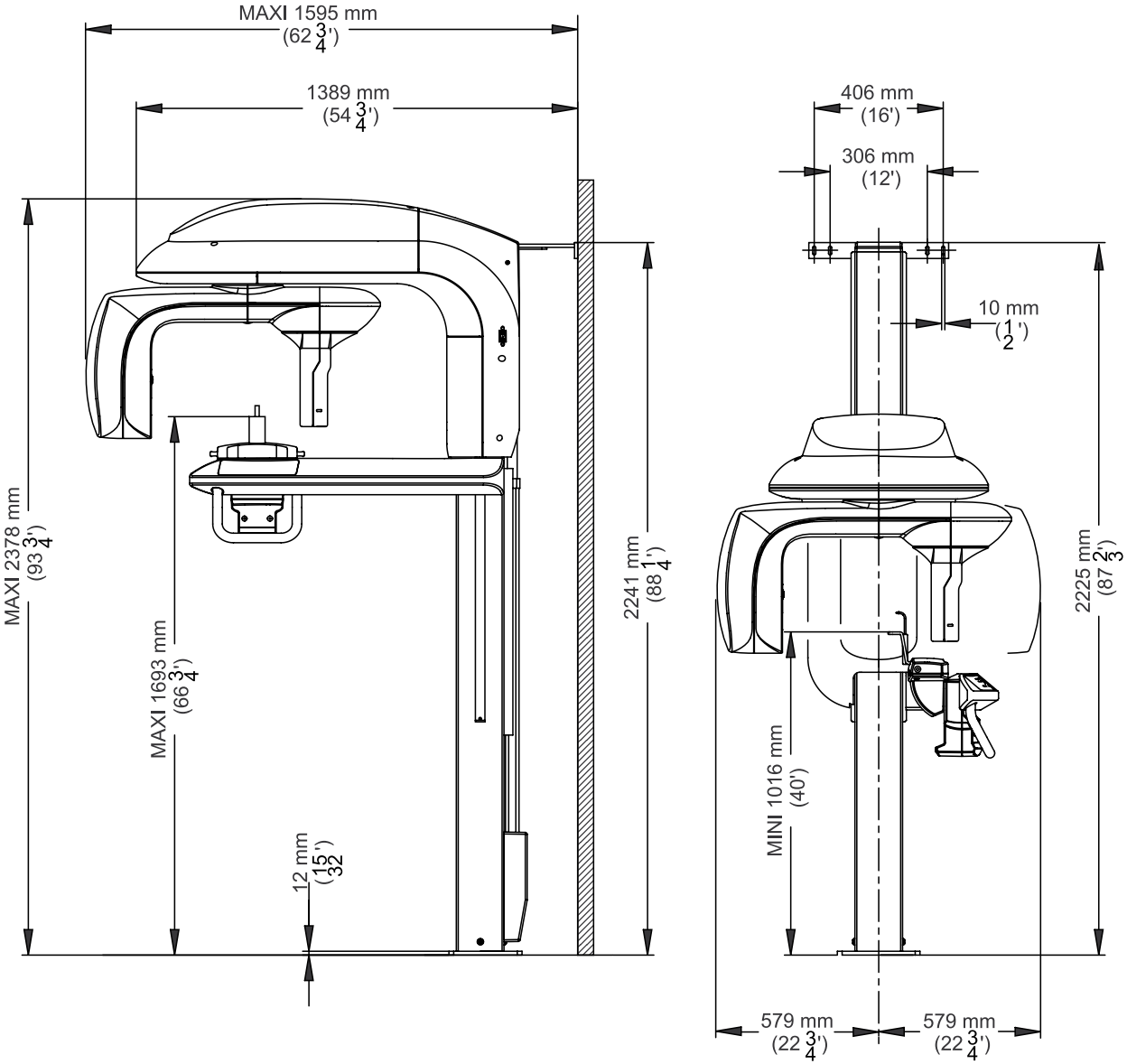
MAXI 1595 mm
(62 3/4')
1389 mm
(54 3/4')
MAXI 2378 mm
(93 3/4')
MAXI 1693 mm
(66 3/4')
12 mm
(15/32')
2241 mm
(88 1/4')
406 mm
(16')
306 mm
(12')
10 mm
(1/2')
2225 mm
(87 2/3')
MINI 1016 mm
(40')
579 mm
(22 3/4')
579 mm
(22 3/4')